Coloring Objects Built From Bricks

Suzanne Gallagher* Joseph O'Rourke†

Abstract

We address a question posed by Sibley and Wagon. They proved that rhombic Penrose tilings in the plane can be 3-colored, but a key lemma of their proof fails in the natural 3D generalization. In that generalization, an object is built from bricks, each of which is a parallelopiped, and they are glued face-to-face. The question is: How many colors are needed to color the bricks of any such object, with no two face-adjacent bricks receiving the same color?

For arbitrary parallelopiped bricks, we prove zonohedra are 4-colorable, and 4 colors are sometimes necessary, by establishing two Sibley conjectures for zonohedra.

For orthogonal bricks, we narrow the chromatic number to $\{3, 4\}$, and have several results. Any genus-0 object (a "ball") is 2-colorable; any genus-1 object is 3-colorable. For objects of higher genus, we show that if an object's holes are "nonplanar" in a technical sense, then it is 2-colorable regardless of its genus, and for various special cases of planar holes, we can establish 3-colorability.

We conjecture that all objects built from orthogonal bricks are 3-colorable. This would imply that the chromatic number does not increase when passing from 2D to 3D.

1 Introduction

Our work stems from questions posed by Stan Wagon at the open-problem session [DO03] of the 14th Canadian Conference on Computational Geometry.[1] Sibley and Wagon noticed that rhombic Penrose tilings were 3-colorable, and proved that any collection of "tidy" parallelograms in the plane (including those Penrose tilings) is 3-colorable [SW00]. Their proof establishes the existence of an "elbow" in any such collection: a parallelogram with at most two neighbors. This then supports an inductive coloring algorithm.

As reported in [Wag02], attempts to extend this result to three dimensions have failed, largely because the analog of their elbow lemma is false. Wagon, Robertson, and Schweitzer found a genus-13 polyhedron composed of parallelopipeds in which none has degree three or less [RSW02]. Were such always present, an inductive argument could establish 4-colorability. Without that lemma, the chromatic number of such objects is unclear.

Although we do not settle the general question for 3D, we establish a number of partial results, which we will summarize after setting notation.[2]

1.1 Notation

A *parallelopiped* is a hexahedron composed of three pairs of parallel faces, each of which is necessarily a parallelogram. We will use the simpler term *brick* to refer to the same shape. An *orthogonal brick* is one whose (internal) dihedral angles are all $\pi/2$, and whose faces are necessarily rectangles, i.e., it is a rectangular box.

A collection of bricks is said to be *properly joined* if each pair of bricks is either dijoint, or intersects either in a single point, a single whole edge of each, or a single whole face of each. Two bricks in a collection are *adjacent* if they share a single whole face. A face of a brick that has no other brick face joined to it is called *exposed*. Define the *brick graph* of a collection of bricks to have a node for each brick, and an arc for each pair of adjacent bricks.

We will say that an object is *built from bricks* if it is a collection of properly joined bricks whose brick graph is connected.[3]

The *genus* of the object is the genus of the surface obtained by offsetting the surface inward by a small $\epsilon > 0$. This shrinking ensures that the neighborhood of each point becomes homeomorphic to a disk. Then the genus of the surface may be computed via Euler's formula. A genus-0 object is a *ball*: a solid object that is topologically equivalent to (i.e., homeomorphic to) a solid sphere.

A *k-coloring* of an object built from bricks is a k-coloring of its brick graph, i.e., an assignment of k colors, one per brick, such that every pair of adjacent bricks are assigned different colors. Note this is a "volume coloring," in contrast to the more common "surface coloring."

Call any brick that has at most degree-3 in the brick graph an (≤ 3)-*brick*. A brick is a *corner* brick if it has a vertex all three of whose incident faces are exposed. A corner brick is a (≤ 3)-brick, but not every (≤ 3)-brick is a corner brick. As mentioned before, there exists an object built from bricks that has no (≤ 3)-brick (and so no corner brick). Nevertheless, the question is open for balls built from bricks.

*suzanne@felix.smith.edu.

†Department of Computer Science, Smith College, Northampton, MA 01063, USA. orourke@cs.smith.edu. Supported by NSF Distinguished Teaching Scholars award DUE-0123154.

[1] Lethbridge, Alberta, Canada, August 2002.

[2] We alter much of the notation used by Sibley and Wagon.

[3] Called a "p-map" in [Sib00].

1.2 Summary of Results

For arbitrary parallelopiped bricks, we have one result: [Sib00]

1. Every zonohedron has a corner brick, and so is 4-colorable. Moreover, some zonohedra require 4 colors.

For orthogonal bricks, we have three main results:

1. Some objects built from orthogonal bricks need 3 colors, but all have a corner brick, and so are 4-colorable.
2. Every ball built from orthogonal bricks is 2-colorable.
3. Every genus-1 object built from orthogonal bricks is 3-colorable.

This last result is a corollary of a stronger but less concise result that shows that every object built from orthogonal bricks with holes satisfying certain restrictions is 3-colorable.

2 Zonohedra

In this section we consider balls built from general parallelopiped bricks, first studied in [Sib00]. He formulated two conjectures, the first of which (every object built from bricks has a corner) was shown false, as just discussed. Sibley's second conjecture, which would have followed from the first, is that every object built from bricks is 4-colorable. This remains open. A proof of 5-colorability was presented in [RSW02], based on the existence of a (≤ 4)-brick. Although there is a gap in the proof, it can be filled without too much difficulty. Examples needing 4 colors are known. So the chromatic number is in $\{4, 5\}$.

Our main result here is that both Sibley's conjectures hold for zonohedra. The reason we studied zonohedra is that they seem intuitively to have the highest degree of connectivity of any ball; so they seem the worst coloring case for genus-zero objects. The questions of whether (general, nonzonohedral) balls have corners, and are 4-colorable, were raised in [RSW02] and remain open.

A zonohedron is a convex polyhedron all of whose faces are parallelograms. A typical zonohedron is shown in Fig. 1. Zonohedra are natural candidate objects for us, because clearly any object built from parallelopiped bricks will have parallelogram faces. Although not obvious, the reverse is true as well: every zonohedron can be built (in many ways) from bricks.

The combinatorics of the faces of a zonohedron are equivalent to those of a simple arrangement of planes in 3-space [Zie94, p. 207]. We exploit this connection to prove this result:

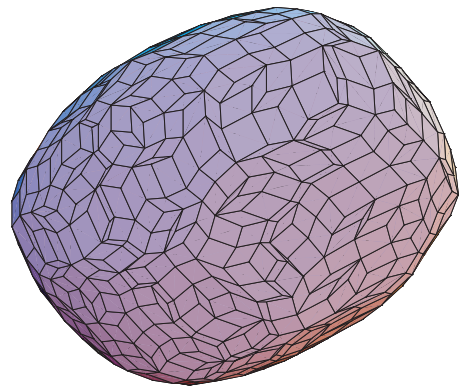

Figure 1: Zonohedron generated by 30 random vectors by code written by David Eppstein [Epp95]. It may be dissected into $\binom{30}{3} = 4060$ bricks.

Theorem 2.1 *A zonohedron built from n bricks has at least four corner bricks if $n \geq 4$. If $n < 4$, all of its bricks are corners.*

Corollary 2.2 *A zonohedron built from bricks is 4-colorable.*

Proof: Remove a corner, apply induction, and reglue the corner brick, using the color not used among its three neighbors. □

Note that this result is (apparently) unrelated to the question posed in [Wag02][4] asking for the chromatic number of the parallelograms on the surface of a zonohedron.

Because all the properties we used generalize to arbitrary dimensions, we have also established this:

Theorem 2.3 *A zonotope in d dimensions built from n bricks has at least d corner bricks if $n \geq d+1$. If $n < d+1$, all of its bricks are corners. Such a zonotope is $(d+1)$-colorable.*

We have not found this theorem in the literature, but have no doubt that it is known.

3 Orthogonal Bricks

In this section we examine objects built from orthogonal bricks, parallelopipeds whose faces are all rectangles. When working with orthogonal bricks, we can assume without loss of generality that all faces are parallel to the coordinate planes. In this case, the existence of corner bricks is easily established:

Theorem 3.1 *Every object O built from orthogonal bricks has at least one corner brick.*

[4] See also The Open Problems Project, Problem 44, `http://cs.smith.edu/~orourke/TOPP/`.

Proof: Let B be the bounding box for the object O. The top view of B is a rectangle R. All four sides of R must touch some brick. Let b be the rightmost brick among those that touch the front edge of R. Brick b must be exposed above (because it is visible in the top view), exposed to the right (because it is rightmost), and exposed to the front (because it touches the front face of B). Therefore b is a corner brick. □

This permits an inductive proof: Remove a corner brick b, 4-color, replace using the color not adjacent to b:

Corollary 3.2 *Every object built from orthogonal bricks is* 4*-colorable.*

3.1 Orthogonal Balls are 2-Colorable

Define an *orthogonal ball* to be any ball O (i.e., any genus-0 object) built from orthogonal bricks. In this section we prove that orthogonal balls are 2-colorable. This is to be contrasted with the corresponding result in 2D:

Lemma 3.3 *Any genus-*0 *2D collection of rectangular bricks is* 2*-colorable.*

Thus, no more colors are needed in 3D.

A *coordinate plane* is one whose normal is parallel to either the x, y, or z axes; we will identify them by their normals. Say that a plane P *cuts* a brick b if P includes a point strictly interior to b. Define a collection of bricks to form an *xy-layer* (or just a *layer*) if a z-plane cuts each brick. A *connected layer* is a layer for which the brick graph is connected.

Let γ be a cycle of bricks in a layer. Two bricks in γ are called *opposing* if they are both cut by either a x- or a y-coordinate plane, i.e., they include points at the same height z, and with either the same y- or x-coordinate respectively. One of our most important technical tools is this "crack lemma":

Lemma 3.4 *Let O be a genus-*0 *object containing a connected layer A that has genus greater than zero. Then any pair of opposing bricks in a cycle surrounding a hole of A have the same extent orthogonal to their plane of opposition, i.e., their "cracks" align.*

Fig. 2 illustrates a key part of the proof. This lemma permits us to "fill-in" holes in a layer, for the cracks align and the filling bricks can be joined face-to-face (unlike the situation in Fig. 3 below).

Define the intersection of two adjacent layers A and B to be those bricks in layer A which share a face with a brick in layer B, and those bricks in layer B which share a face with a brick in layer A. We need one more lemma on layer intersections to reach our theorem:

Lemma 3.5 *The intersection of two genus-*0 *layers in a genus-*0 *object is connected.*

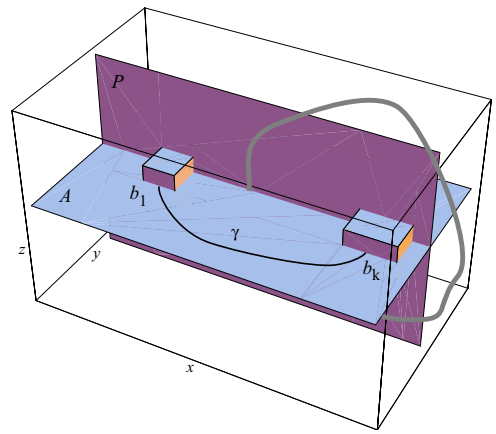

Figure 2: A rope showing that the object has genus at least 1, a contradiction.

Theorem 3.6 *Any ball built from orthogonal bricks is* 2*-colorable.*

3.2 Objects of Higher Genus

Objects built from orthogonal bricks are not 2-colorable in general; in fact, one can find an example in 2D of a genus-1 object built from rectangles which requires 3 colors because of the existence of an odd (9) cycle. See Fig. 3. Of course this example establishes the same result for 3D objects.

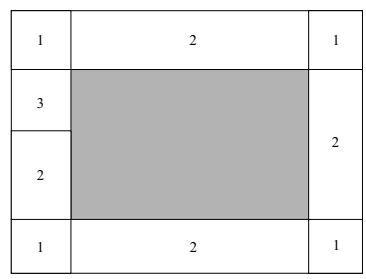

Figure 3: An example of a brick graph that requires 3 colors.

By Sibley and Wagon's theorem, every 2D object built from rectangles is 3-colorable, but in 3D, it becomes more difficult to see if this still holds. The remainder of our results explore this issue. Our first result is that 2 colors suffice for an object O built from orthogonal bricks if all the object's holes are "nonplanar" in the following sense. Call a hole of O a *dividing hole* if some coordinate plane passes through the hole in such a way that the plane is cut into two disconnected pieces by the hole. Thus crooked/twisting holes are not dividing holes.

Theorem 3.7 *If an object built from orthogonal bricks has no dividing holes, then it is* 2*-colorable.*

Proof: In any given layer, look at a cycle around a hole, and let b_1 and b_k be bricks which are cut by a plane P parallel to a coordinate plane. Since the hole is not a dividing hole, the hole does not cut P into disconnected pieces, so there must be a path between b_1 and b_k. Thus, Lemma 3.4 applies, allowing us to "fill-in" the hole, giving a genus-0 object. Then apply Theorem 3.6. □

3.3 Shine-Through Holes

We now explore dividing holes. Define a hole to be *shine-through* if it is such that a light oriented parallel to one of the three coordinate axis will be able to shine through to the other side. Shine-through holes are the simplest class of dividing holes, as they divide planes in two directions rather than just one. An extrusion of the rectangles in Fig. 3 leaves a shine-through hole.

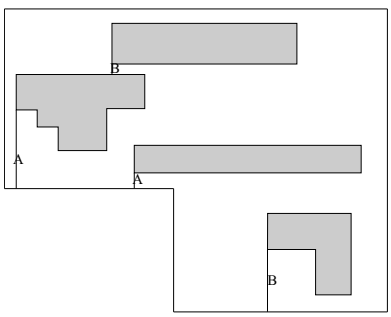

Figure 4: Cutting the cycles to get a genus-0 object.

We employ a number of ideas, hinted at in Figs. 4 and 5, to establish this result:

Theorem 3.8 *If an object built from orthogonal bricks has only shine-through holes which are all oriented in one of two directions, then it is* 3*-colorable.*

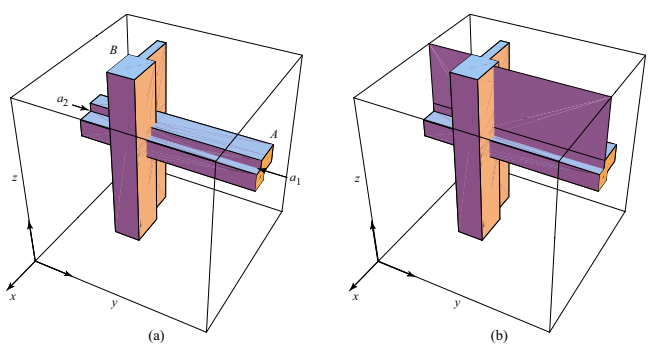

Figure 5: (a) Cracks a_1 and a_2 of hole A drilled through cube do not align. (b) The quarter-planes incident to the cracks are therefore not coplanar.

3.4 Separated Dividing Holes

Another special class of dividing holes are those that are nicely separated, as in the following theorem:

Theorem 3.9 *If all of the dividing holes of an object divide distinct planes that are all parallel, the object is* 3*-colorable.*

Clearly a single hole satisfies this theorem, so:

Corollary 3.10 *Every genus-*1 *object built from orthogonal bricks is* 3*-colorable.*

Although we cannot offer a general proof which works for arbitrary genus, the number of specific cases for which we can prove 3-colorability leads us to the following conjecture:

Conjecture 3.1 *All objects built from orthogonal bricks are* 3*-colorable.*

In some ways, it would be surprising if this conjecture is true, for it says that the chromatic number does not increase between 2D and 3D for orthogonal bricks, whereas we know it does increase for general bricks (from 3 to ≥ 4).

Acknowledgements. We thank Michael Albertson for useful discussions, and Mirela Damian for helping compute the genus of the "buttressed octahedron" in [RSW02].

References

[DO03] E. D. Demaine and J. O'Rourke. Open problems from CCCG 2002. In *Proc. 15th Canad. Conf. Comput. Geom.*, 2003. To appear. arXiv cs.CG/0212050. `http://arXiv.org/abs/cs/0212050/`.

[Epp95] D. Eppstein. Zonohedra and zonotopes. Technical Report 95-53, Dept. Info. Comput. Sci., U.C. Irvine, December 1995.

[RSW02] L. Robertson, M. Schweitzer, and S. Wagon. A buttressed octahedron. *Geomcombinatorics*, 11(4):119–124, 2002.

[Sib00] T. Sibley. Coloring space tilings of generalized parallelograms. *Geombinatorics*, 10(2):75–76, 2000.

[SW00] T. Sibley and S. Wagon. Rhombic Penrose tilings can be 3-colored. *American Mathematics Monthly*, 106:251–253, 2000.

[Wag02] S. Wagon. A machine resolution of a four-color hoax. In *Proc. 14th Canad. Conf. Comput. Geom.*, pages 181–193, August 2002.

[Zie94] G. M. Ziegler. *Lectures on Polytopes*, volume 152 of *Graduate Texts in Mathematics*. Springer-Verlag, Heidelberg, 1994.